CO-B4 Carbon Monoxide Sensor
4-Electrode

PATENTED

Technical Specification

Figure 1 CO-B4 Schematic Diagram

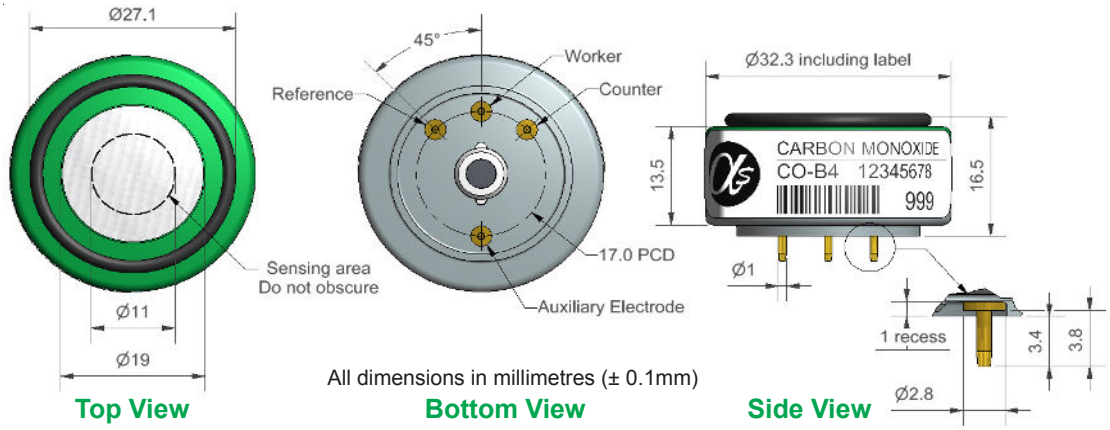

All dimensions in millimetres (± 0.1mm)

PERFORMANCE	Sensitivity	nA/ppm at 2ppm CO	420 to 650
	Response time	t_{90} (s) from zero to 10ppm CO	< 25
	Zero current	nA in zero air at 20°C	+30 to -130
	Noise*	±2 standard deviations (ppb equivalent)	4
	Range	ppm limit of performance warranty	1000
	Linearity	ppb CO error at full scale, linear at zero, 500ppm CO	20 to 35
	Overgas limit	maximum ppm for stable response to gas pulse	2000

*** Tested with Alphasense ISB low noise circuit**

LIFETIME	Zero drift	ppb equivalent change/year in lab air	< ±100
	Sensitivity drift	% change/year in lab air, monthly test	< 10
	Operating life	months until 50% original signal (24 month warranted)	> 36

ENVIRONMENTAL	Sensitivity @ -20°C	(% output @ -20°C/output @ 20°C) @ 5ppm CO	40 to 70
	Sensitivity @ 50°C	(% output @ 50°C/output @ 20°C) @ 5ppm CO	110 to 125
	Zero @ -20°C	nA	-30 to +30
	Zero @ 50°C	nA	-50 to -200

CROSS SENSITIVITY

Filter capacity	ppm·hrs		H_2S	250,000
H_2S sensitivity	% measured gas @	5ppm	H_2S	< 1
NO_2 sensitivity	% measured gas @	5ppm	NO_2	< 1
Cl_2 sensitivity	% measured gas @	5ppm	Cl_2	< 1
NO sensitivity	% measured gas @	5ppm	NO	< -3
SO_2 sensitivity	% measured gas @	5ppm	SO_2	< 0.1
H_2 sensitivity	% measured gas @	100ppm	H_2 at 20°C	< 10
C_2H_4 sensitivity	% measured gas @	100ppm	C_2H_4	< 1
NH_3 sensitivity	% measured gas @	20ppm	NH_3	< 0.1

KEY SPECIFICATIONS	Temperature range	°C	-30 to 50
	Pressure range	kPa	80 to 120
	Humidity range	% rh continuous	15 to 90
	Storage period	months @ 3 to 20°C (stored in sealed pot)	6
	Load resistor	Ω (ISB circuit is recommended)	33 to 100
	Weight	g	< 13

At the end of the product's life, do not dispose of any electronic sensor, component or instrument in the domestic waste, but contact the instrument manufacturer, Alphasense or its distributor for disposal instructions.

NOTE: all sensors are tested at ambient environmental conditions, with 10 ohm load resistor, unless otherwise stated. As applications of use are outside our control, the information provided is given without legal responsibility. Customers should test under their own conditions, to ensure that the sensors are suitable for their own requirements.

Alphasense Ltd, Sensor Technology House, 300 Avenue West, Skyline 120, Great Notley. CM77 7AA. UK
Telephone: +44 (0) 1376 556 700 Fax: +44 (0) 1376 335 899 E-mail: sensors@alphasense.com Website: www.alphasense.com

CO-B4 Performance Data

Technical Specification

Figure 2 Sensitivity Temperature Dependence

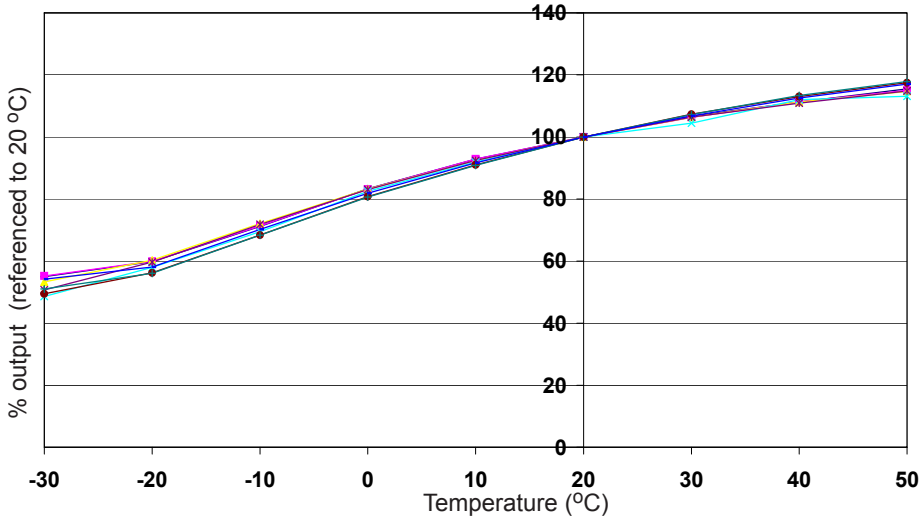

Figure 2 shows the temperature dependence of sensitivity at 2ppm CO.

This data is taken from a typical batch of sensors.

Figure 3 Zero Current Temperature Dependence (corrected)

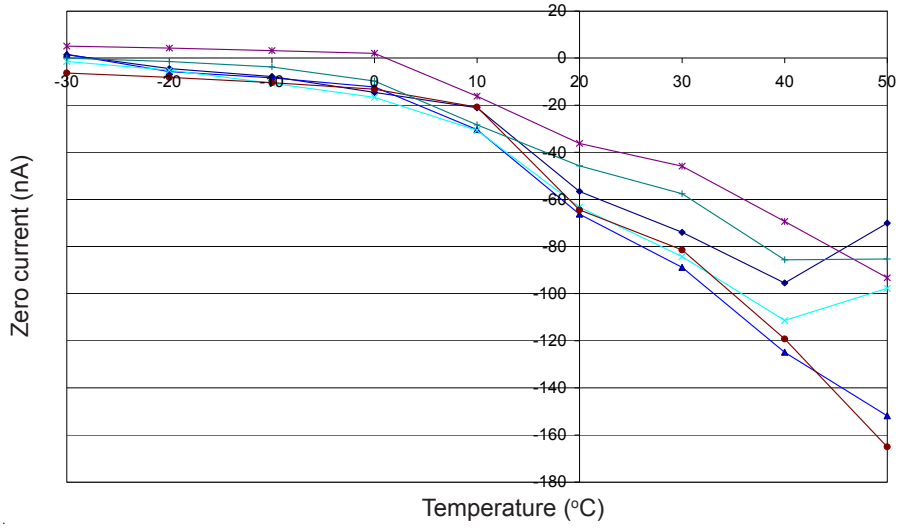

Figure 3 shows the variation in zero output of the working electrode caused by changes in temperature, expressed as nA.

This data is taken from a typical batch of sensors.

Contact Alphasense for futher information on zero current correction.

Figure 4 Response to 0 to 1ppm CO

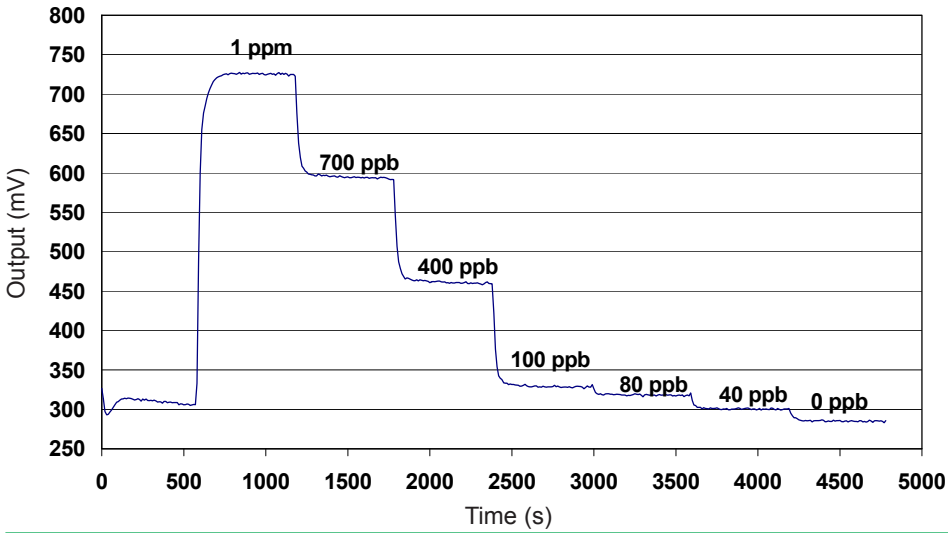

Figure 4 shows response from 0 to 1ppm CO.

Use of Alphasense ISB circuit reduces noise to 4ppb, with the opportunity of digital smooting to reduce noise even further

For further information on the performance of this sensor, on other sensors in the range or any other subject, please contact Alphasense Ltd. For Application Notes visit "www.alphasense.com".

In the interest of continued product improvement, we reserve the right to change design features and specifications without prior notification. The data contained in this document is for guidance only. Alphasense Ltd accepts no liability for any consequential losses, injury or damage resulting from the use of this document or the information contained within. (©ALPHASENSE LTD) Doc. Ref. COB4/APR15