iDB® Outdoor Installation

The contents of the Outdoor Installation Kit are illustrated below.

 Heavy Duty Tripod & Tripod Star	 Microphone Boom Arm	 5-meter Booted Mic Cable
 Microphone Clip	 Water Resistant Windscreen	 Microphone Weather Shield
 Pair of Sandbags	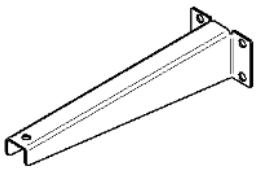 Support Arm including fixings. *	 Shield Clamp & M8x16 Screw
 BNC plug to BNC plug Straight Adapter	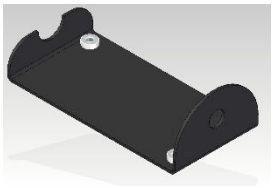 iDB Mounting Plate	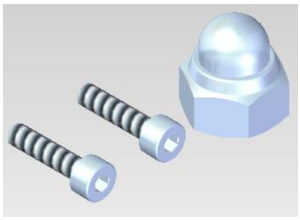 3/8” UNC Dome Nut & 2 off M4x16 Socket Cap Head Screws

Please contact Turnkey Instruments Ltd if any parts are missing

**See page 5 for fixings.*

When being used outside, it is very important that the microphone and other parts and connectors of the equipment are properly protected from water, rain, snow, wind and other harsh weather conditions. The Outdoor Installation Kit has been especially developed for this purpose.

The microphone may be fitted to the heavy duty tripod and boom or the wall bracket. Always assess the likely impact of adjacent walls and buildings on the free field performance of the microphone.

Installation Site

When choosing a site, account should be taken of ease of access and risk of damage or loss of monitoring equipment.

DO protect the microphone from water, weather and wind as described below.

DO NOT drop the microphone. This is a precision item and must be handled carefully.

DO prevent the iDB microphone from being knocked or disturbed by objects, people or animals and thus giving false readings.

DO check daily that equipment has not been disturbed.

Tripod Installation on Hard Ground

Please note the central hook underneath the tripod's top plate will not take heavy weights.

When erecting the Tripod onto a slippery surface or on hard ground such as Tarmac or Asphalt you must attach the Tripod Star to all three legs of the tripod to prevent the legs from splaying apart. Proceed as follows:



1. Position Tripod and Tripod Star in desired location with legs through the open elastic loops as shown.



2. Detach elastic loop from tripod star leg, double the loop over and fit onto the tripod leg as far up the yellow spiked foot as you can, repeat on other two legs.



3. Finally, re-attach the star leg to elastic loop, repeat for each of the other two legs.



Always place a heavy weight or several filled sandbags in the centre of the Tripod Star. This will prevent the Tripod blowing over in strong winds. Make sure the weight is sufficient to ensure the Tripod cannot be blown over even in the strongest wind.

Tripod Installation on Soft Ground

To install the Tripod into soft ground such as turf or soft soil, simply push down the spiked legs into ground as far as they can go. The Tripod Star should be used as described above for extra stability in strong winds. Fit the Tripod Star before pushing the spiked legs into the ground.

Fitting the Microphone Boom Arm



1. The Microphone Boom screws onto the threaded stud in top plate of the Tripod.



2. Screw the Microphone Clip to end of Boom.



Microphone Weather Shield

For added microphone protection from heavy rain and snow, the Weather Shield can be fitted if desired.

1. Attach the Weather Shield Clamp to boom arm near to the Microphone Clip.

2. Secure Weather Shield to holder with M8 X 16 Socket Button Head Screw.

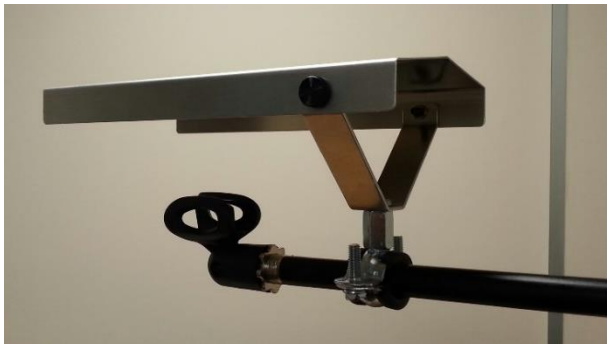

Note the Weather Shield may affect the free field performance of the microphone.

Support Arm

The Support Arm may be used to hold the Boom Arm instead of the tripod and can be wall mounted using the supplied screws, washers and plugs.

An assessment should be made of the effect of adjacent walls and buildings on the free field performance of the microphone.

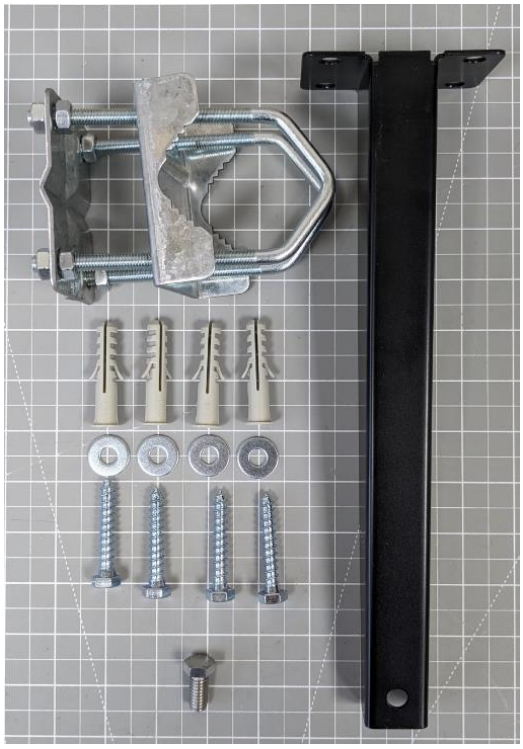

M01125-1 Support Arm for Microphone Boom.
2" x 2" Mast Clamp.
4off M8 x 50 Hex Screw.
4off M8 Washer.
4off M10 Nylon Plug.
1off UNC 3/8" x3/4" Hex Bolt.

Alternatively, the Support Arm can be pole mounted as shown using the mast clamp assembly.

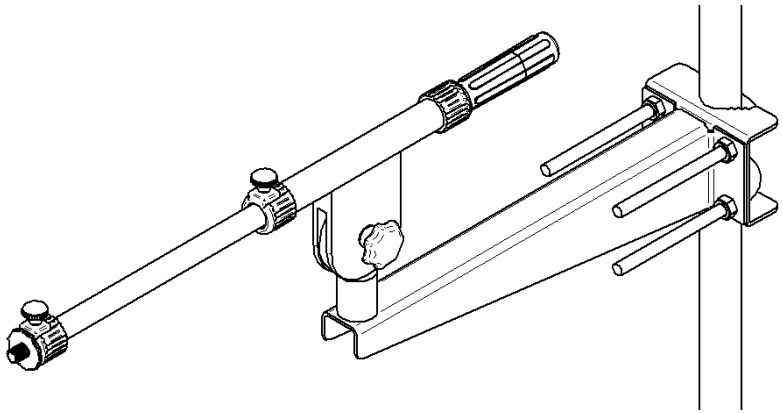

Pole Mounting Option

Microphone Cable Assembly

To prevent water damaging the microphone and connections, the Outdoor Kit contains a 75mm diameter All Weather Windscreen and a double booted 5-metre cable. This connects the microphone to the iVIBE microphone input.



Make sure the ACO 7146 Class 1 microphone has the rubber sleeve fitted as shown in the above photograph. If it isn't the rubber boot will not provide a waterproof connection. (The Turnkey Class 2 microphone does not require the sleeve but has a machined step instead).



1. Connect the BNC plug from one end of the double booted cable to the microphone's BNC socket.



2. Next, ease the flexible rubber boot over the connector and rubber sleeve

3. Finally, push the foam All Weather Windscreen onto the microphone so it meets the boot. The microphone is now ready to be fitted to the microphone clip on the boom arm



The ACO 7146 is a free field microphone and should always be pointed towards the direction of the noise source. Always make sure that the microphone is angled slightly upwards so that any water will run away from, not towards, the microphone diaphragm



Microphone shown with the Weather Shield fitted. Note slight upward angle of the microphone.

Vertical Microphone Mounting

For long term monitoring it may be best to orientate the microphone vertically (either pointing up or down). See our practical Microphone Orientation Guide'

http://www.turnkey-instruments.com/images/documents/Microphone-Orientation-Guide.pdf

The supplied boom has a plastic handle part which can be pulled off the boom part. This will allow the boom to be swiveled into a vertical position and fitted to the tripod as shown. The weather shield will no longer be required in this orientation, but the foam All Weather Windscreen must still be fitted.







Connecting the iDB to the Boom Assembly

The iDB can be mounted directly onto the boom arm as shown in the exploded view.

Item Number	Description	Quantity
01	Foam Weather Shield	1
02	Silicone Weather Sleeve	1
03	Microphone	1
04	BNC to BNC Adaptor	1
05	Screw Cover Plate	2
06	M4x 16 Cap Head Screw	2
07	iDB Instrument	1
08	3/8" UNC Dome Nut	1
09	iDB Boom Mounting Plate M00651-1	1
10	Star Lock Nut	1
11	Boom Assembly	1

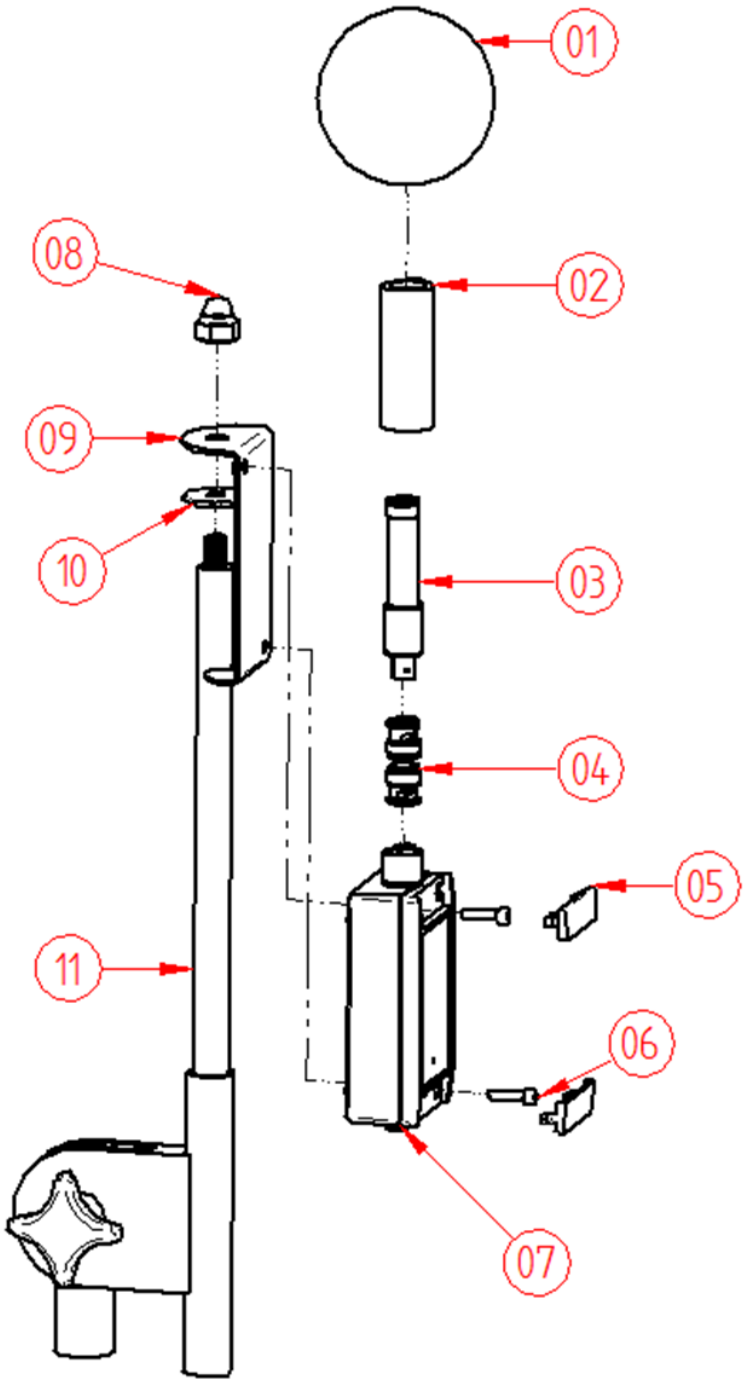







Once the microphone has been connected to iDB the silicone weather sleeve should be slid into position as shown along with foam weather shield.

Note the foam weather shield has a retaining cord which can be looped around the boom arm/mounting plate to prevent loss.

Connecting the Microphone

For information about fitting and connecting the Power Portal, please refer to the **Installing the Power Portal** instructions at www.iVIBE.uk or www.iVIBE.uk/iDB

1. Connect the microphone cable BNC plugs to the shrouded BNC jack socket on the iDB, push the rubber boots over the shrouds to form watertight seals.
2. Or, with the microphone directly connected to the iDB, use the supplied iDB to Power Portal lead for connection to the Power Portal box.

DISCLAIMER

Turnkey Instruments Ltd will not be liable for damage caused by water ingress or by the blowing over of equipment unless these installation instructions are followed exactly.

NOTES

If you need assistance, please contact:

Turnkey Instruments Ltd, Dalby Court, Gadbrook Business Centre, Northwich, England CW9 7TN
Tel: +44 (0) 1606 330020 Fax: +44 (0) 1606 331526
Email: techsupport@turnkey-instruments.com

Please visit www.iVIBE.uk/iDB to access other iDB documentation

Revision History

- Original, Nov 2016
- Issue 2, Class 2 mic orientation notes & iDB boom mounting added.
- Issue 3, New Support Arm introduced. Sep 23, RSP.

© 2016 Turnkey, MJL, Issue 3, Sep 2023
CE 2016

www.turnkey.tel

Turnkey ® is a WTO registered trademark