# TK1011-TURNKEY QUAD POD

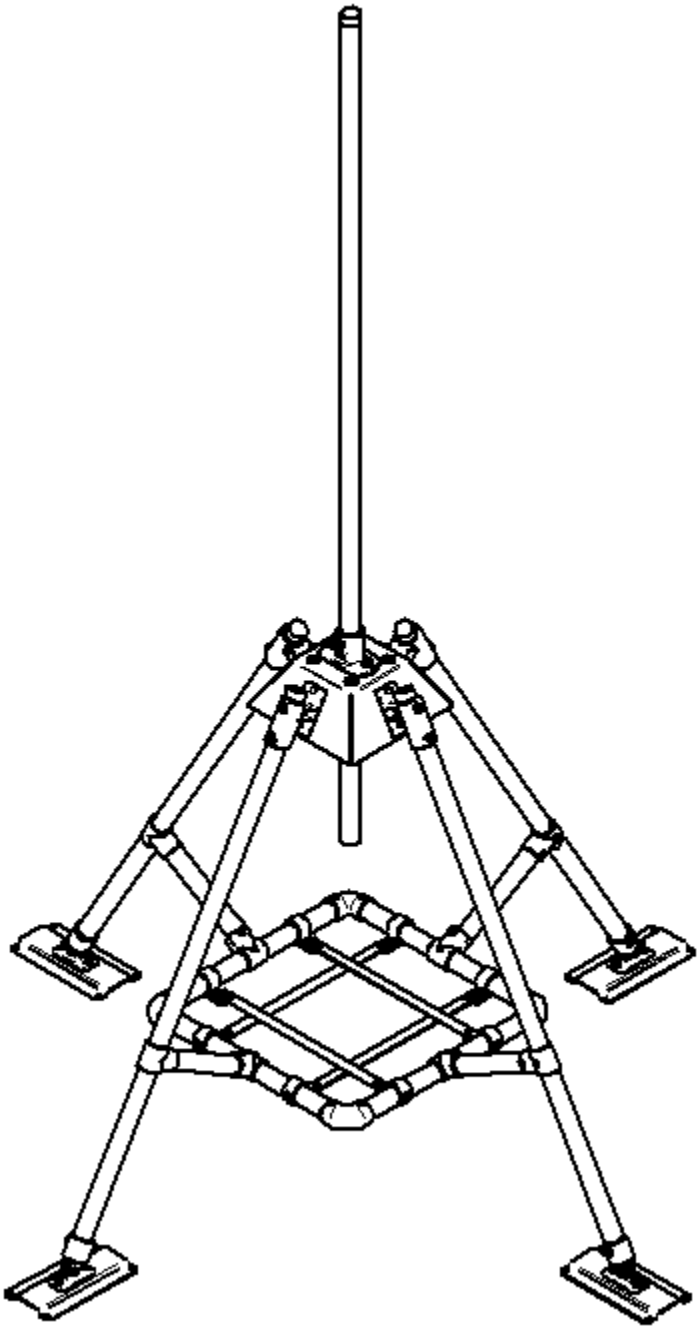

## CHECK YOU HAVE ALL PARTS LISTED

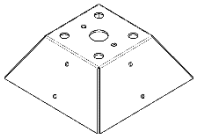

1x M00682-4 leg Support Plate



4x Open Grommet

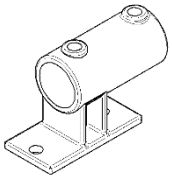

4x Through Hole Offset-Side Palm Fixing

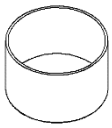

5x Tube end cap - yellow

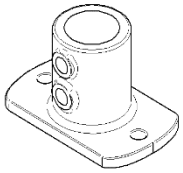

2x Through Hole Base Plate

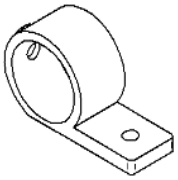

8x Fixing Bracket Single Sided

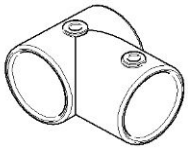

8x Short Tee Tubeclamp

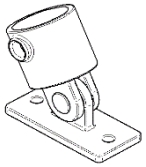

4x Swivel Locating Flange

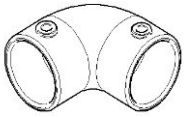

4x 90 Degree Elbow

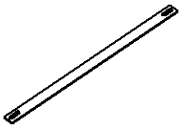

4x M00686-1 Cross Member

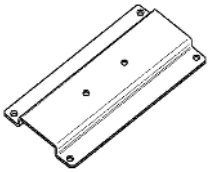

4x M00683-3 Foot Plate



4x 1ft Pole



4x 2ft Pole



4x 1.5m Pole

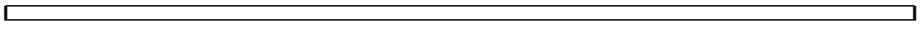

1x 8ft Pole

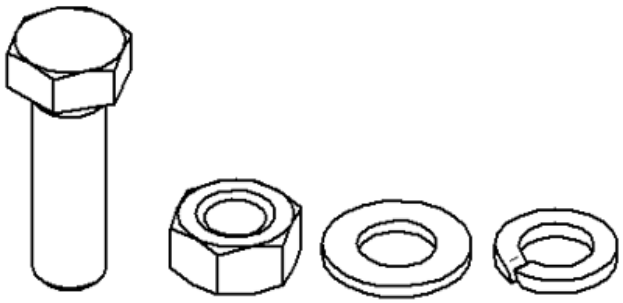

2x M14x45 Hex Bolt, 2x M14 Nut, 2x M14 Plain washer, 2x M14 Spring washer

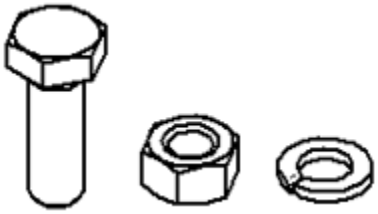

16x M10x30 Hex Bolt 16x M10 Nut 16x M10 Spring washer

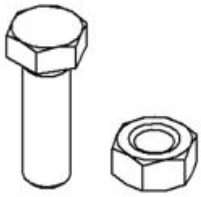

8x M8X30 HEX BOLT, 8x M8 NUT

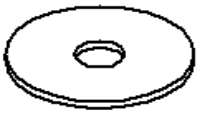

16x M8x30 mudguard washers

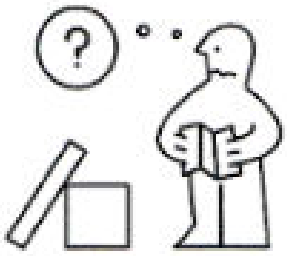

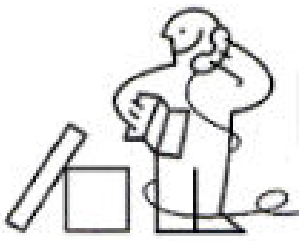

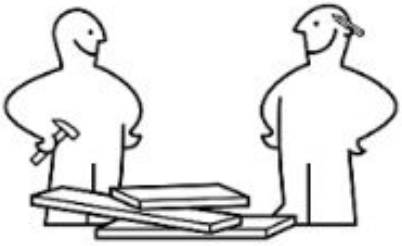

# 1



4x

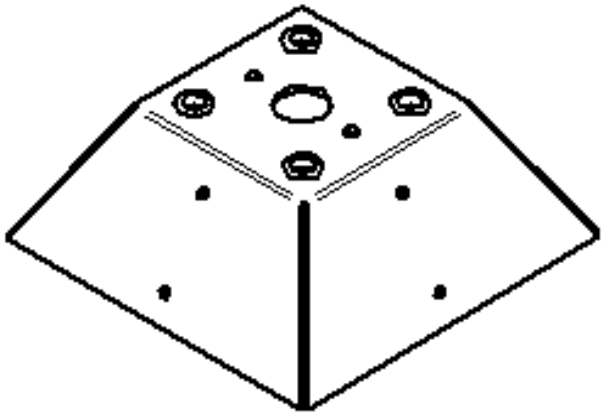

# 2

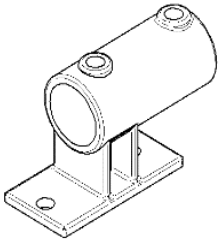

4x

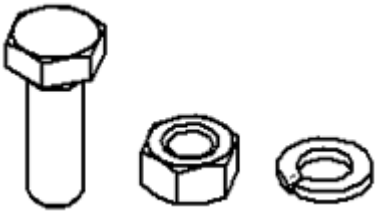

8x M10x30 Hex Bolt 8x M10 Nut
8x M10 Spring washer

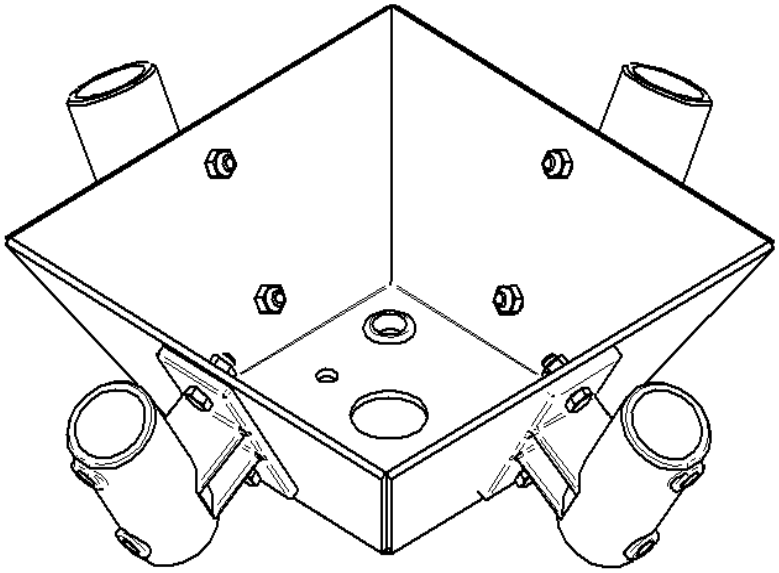

# 3

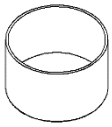

4x



4x 1.5m Tube

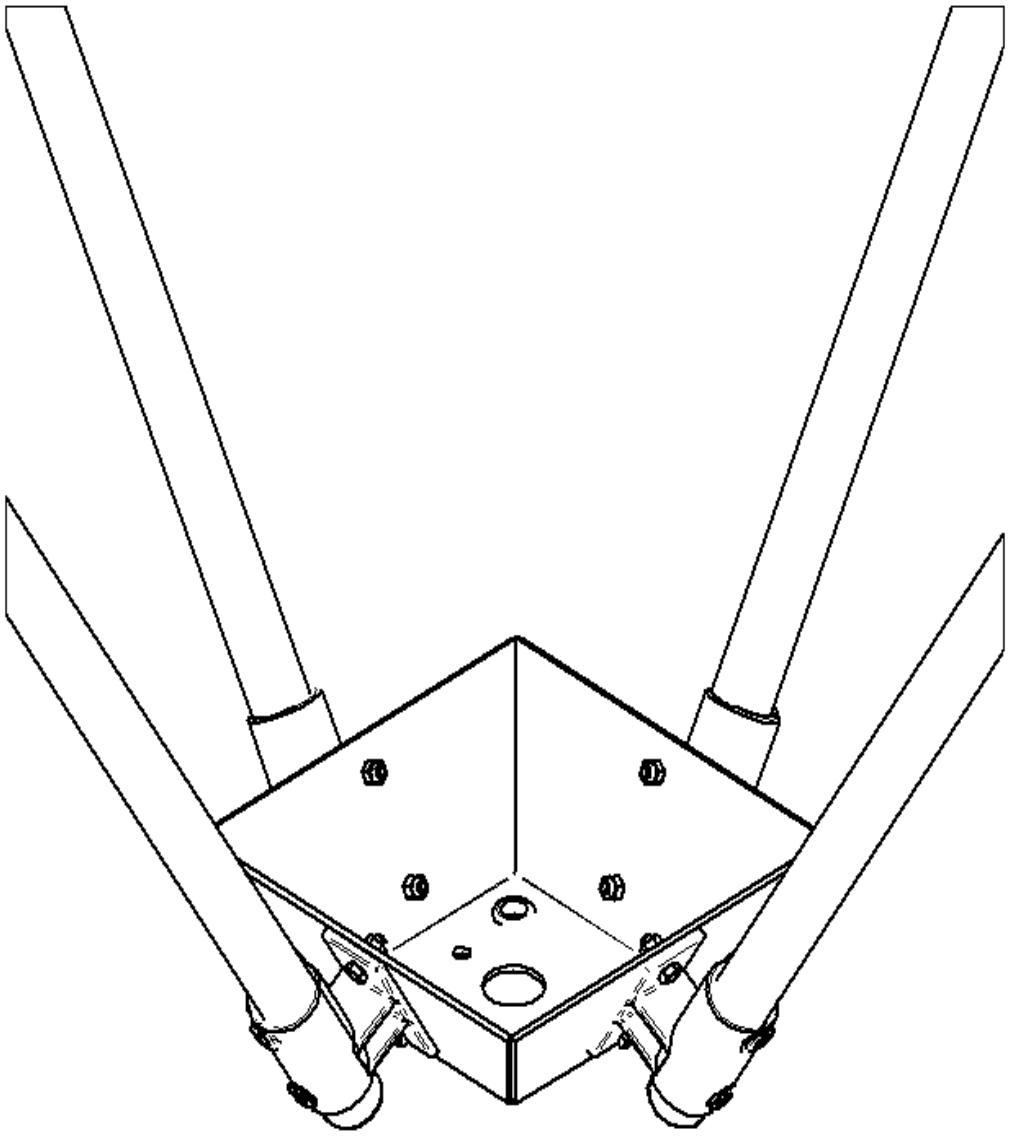

# 4

2x

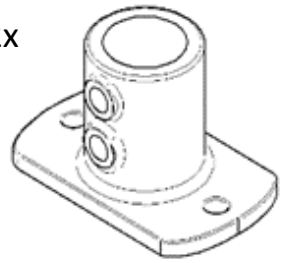

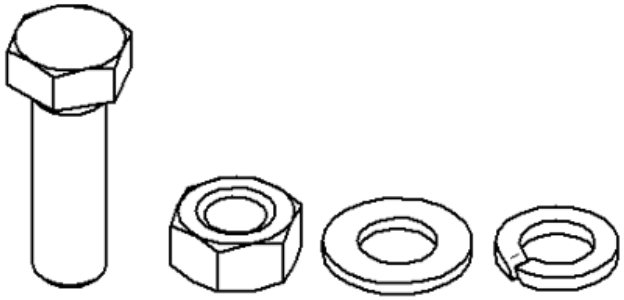

2x M14x45 Hex Bolt 2x M14 Nut

2x M14 Plain washer 2x M14 Spring washer

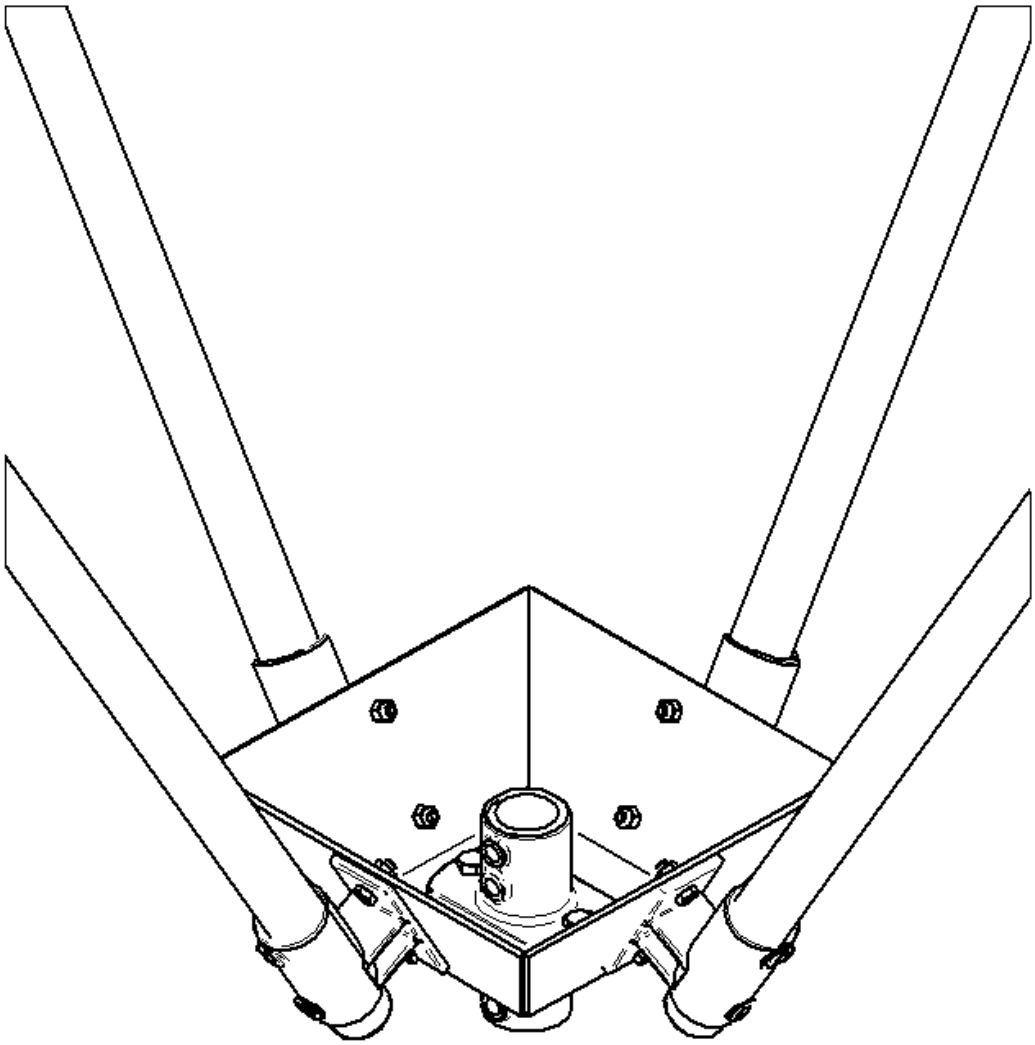

# 5

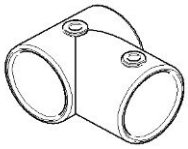

4x

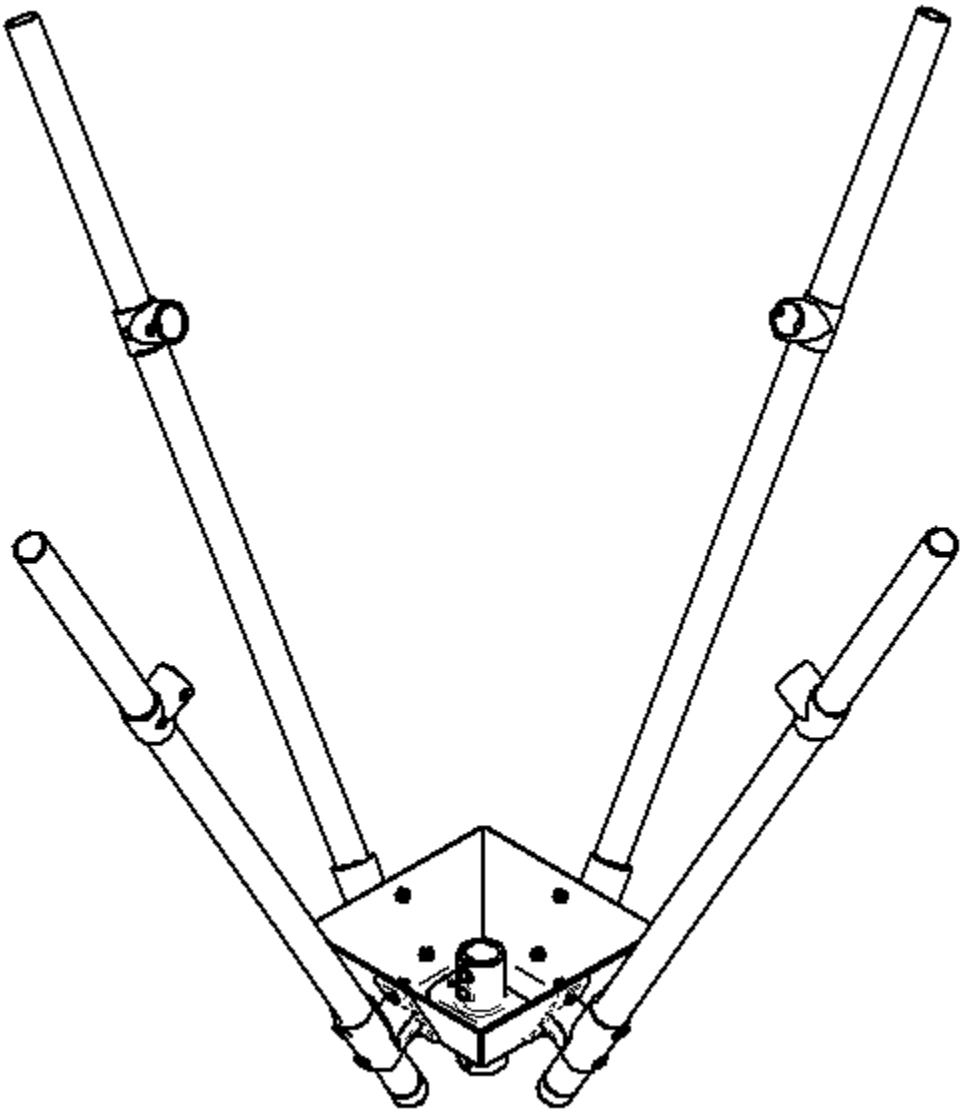

# 6

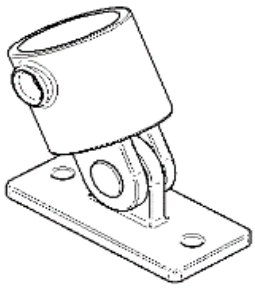

4x

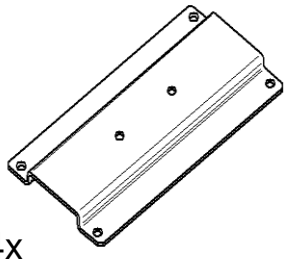

4x

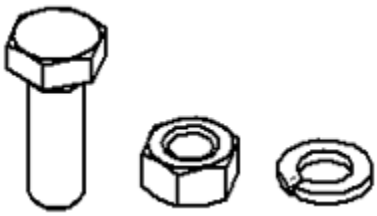

8x M10x30 Hex Bolt
8x M10 Nut
8x M10 Spring washer

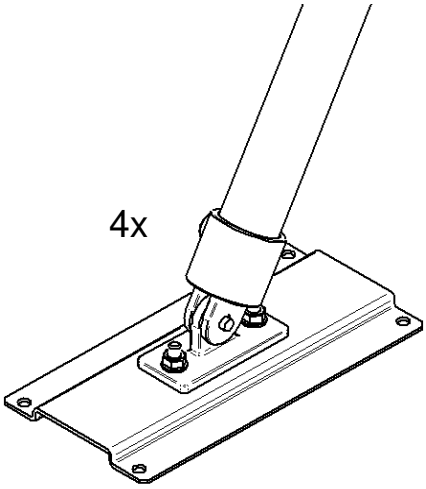

4x

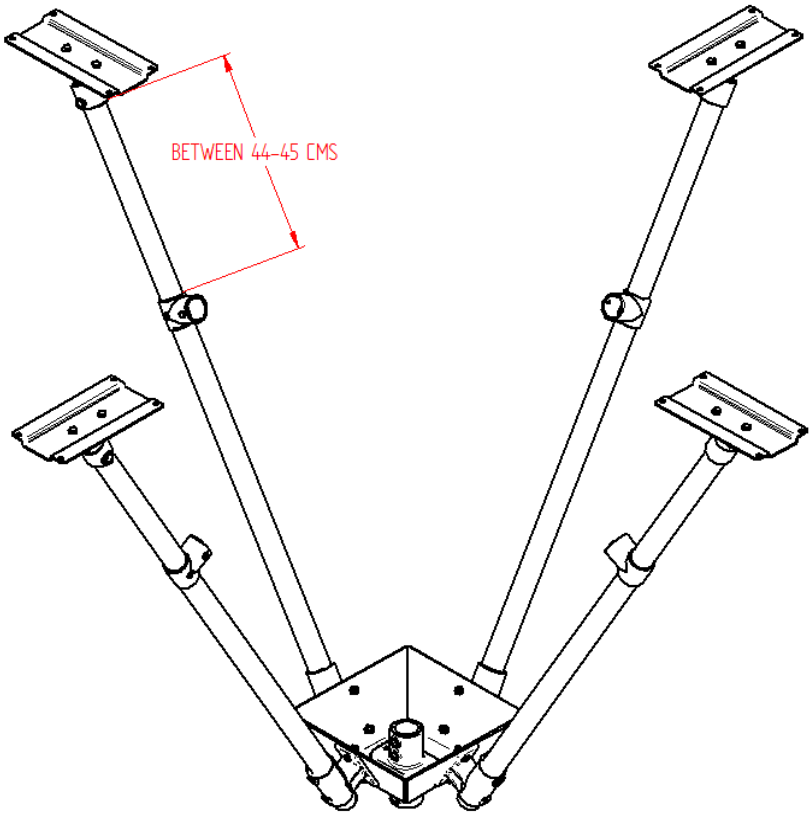

# 7

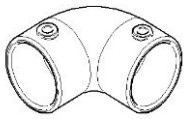

4x

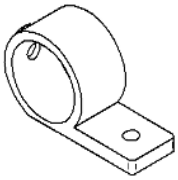

8x

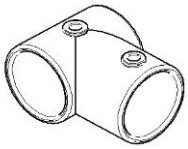

4x



4x 1ft. Tube

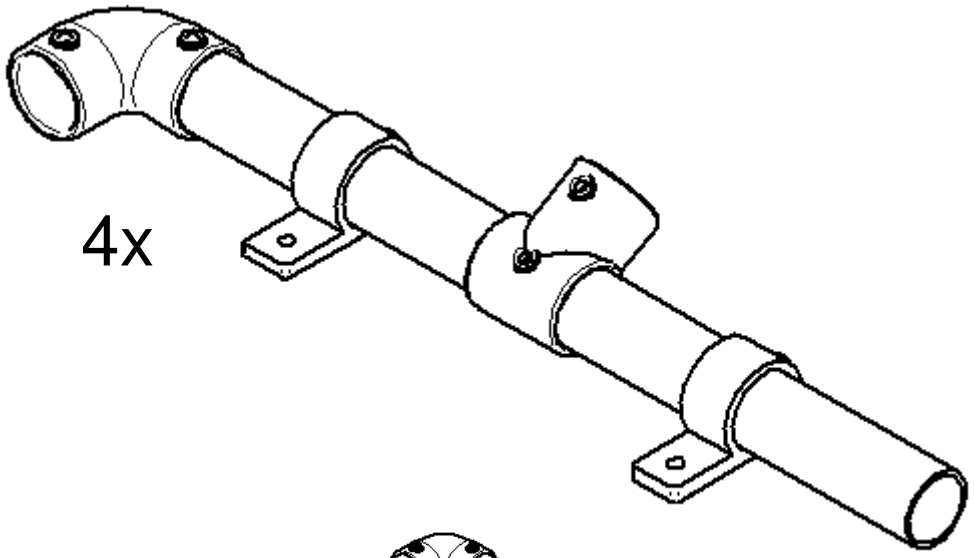

4x

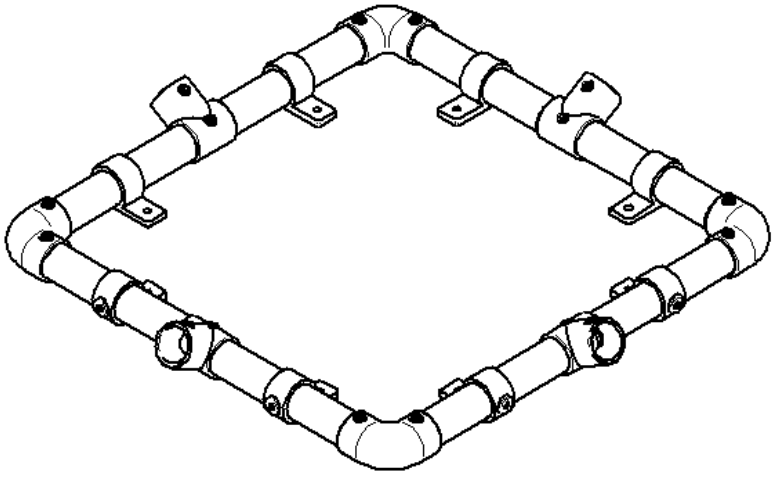

# 8

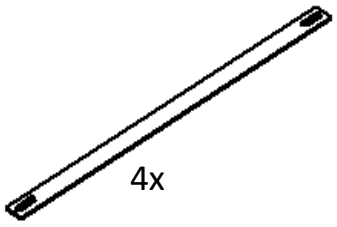

4x

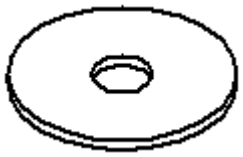

16x M8X30 MUD GUARD WASHER

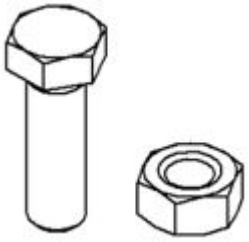

8x M8X30 HEX BOLT, 8x M8 NUT

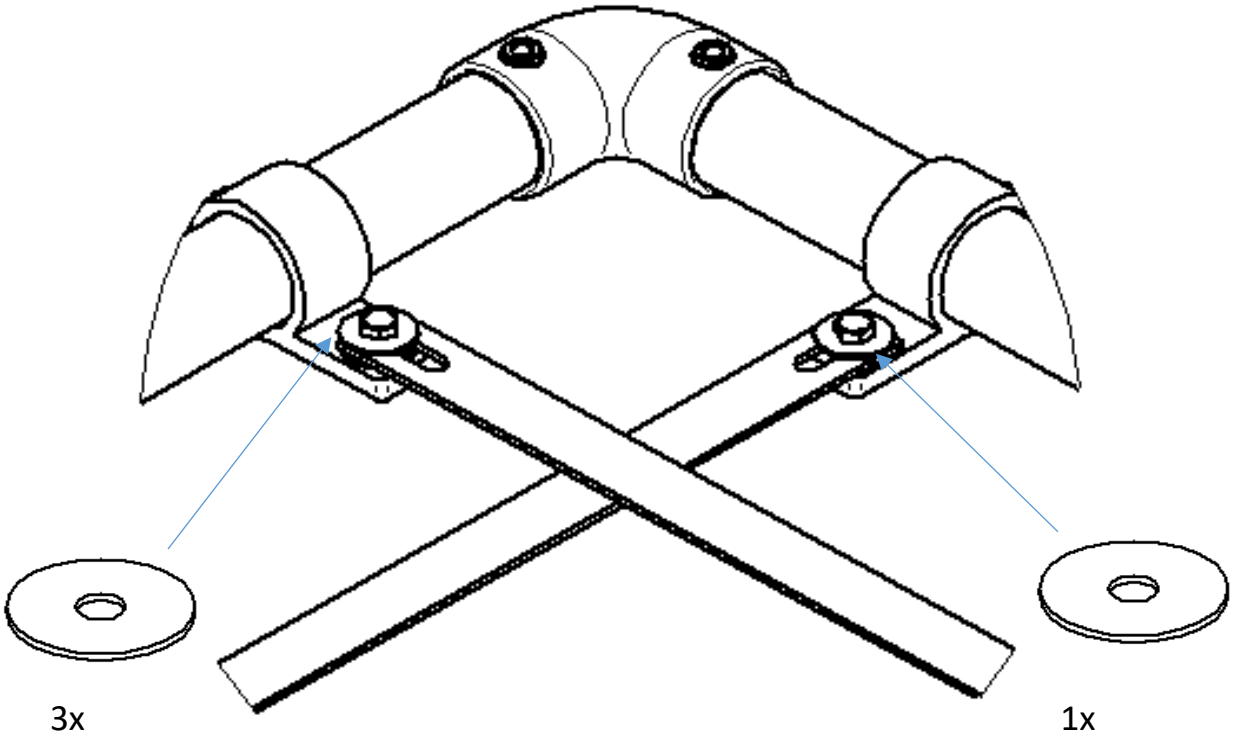

3x

1x

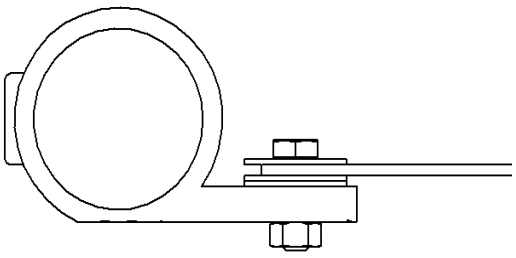

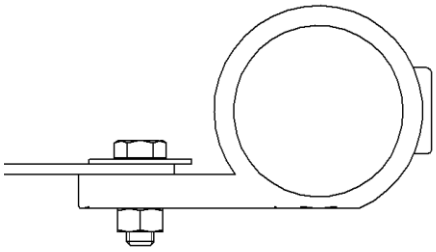

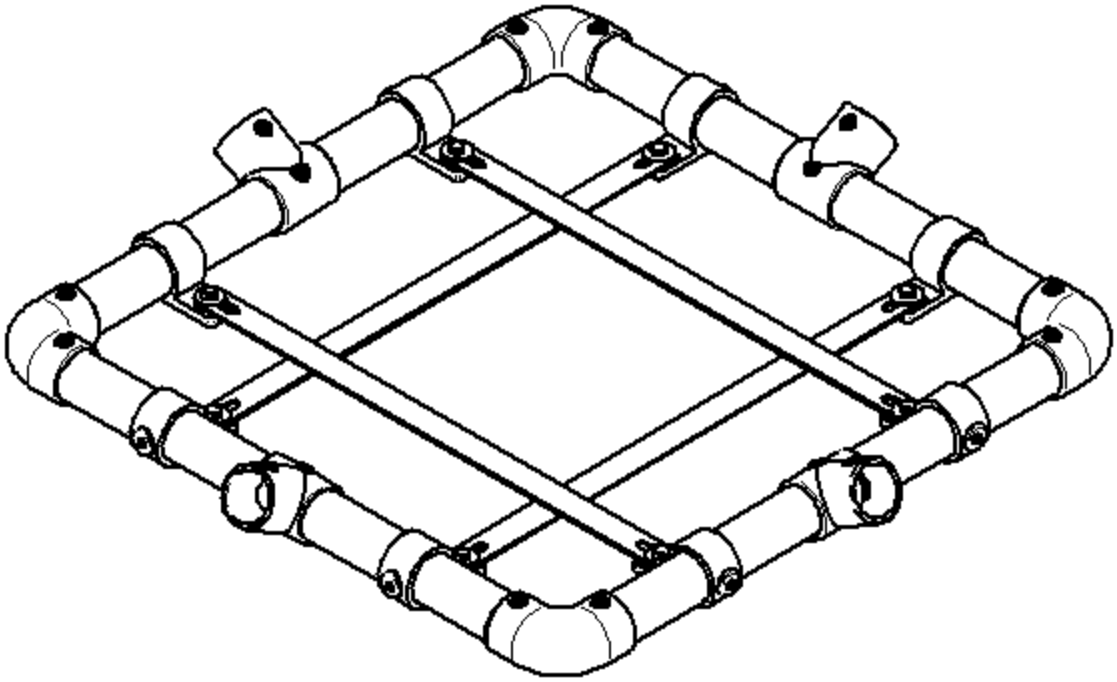

# 9

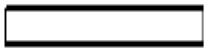

4x 1ft Pole

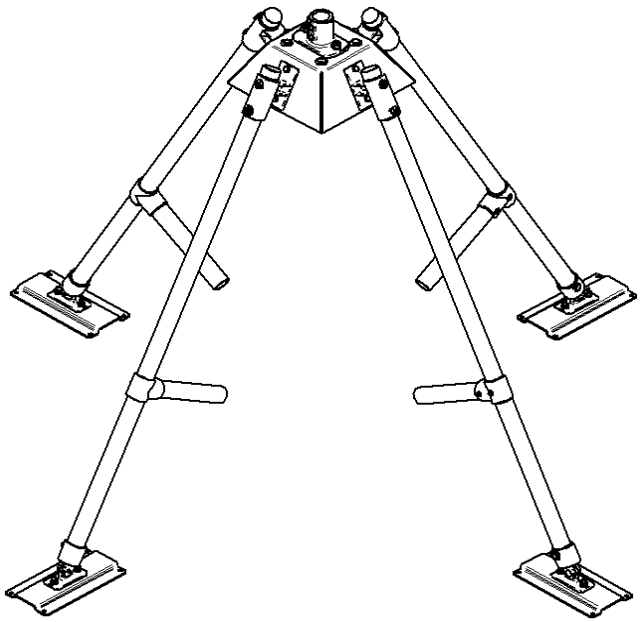

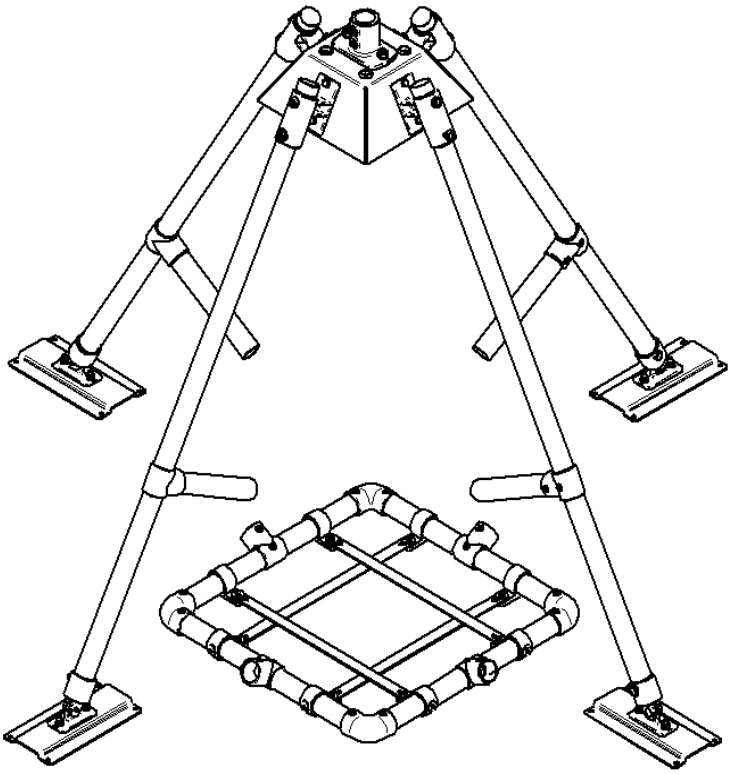

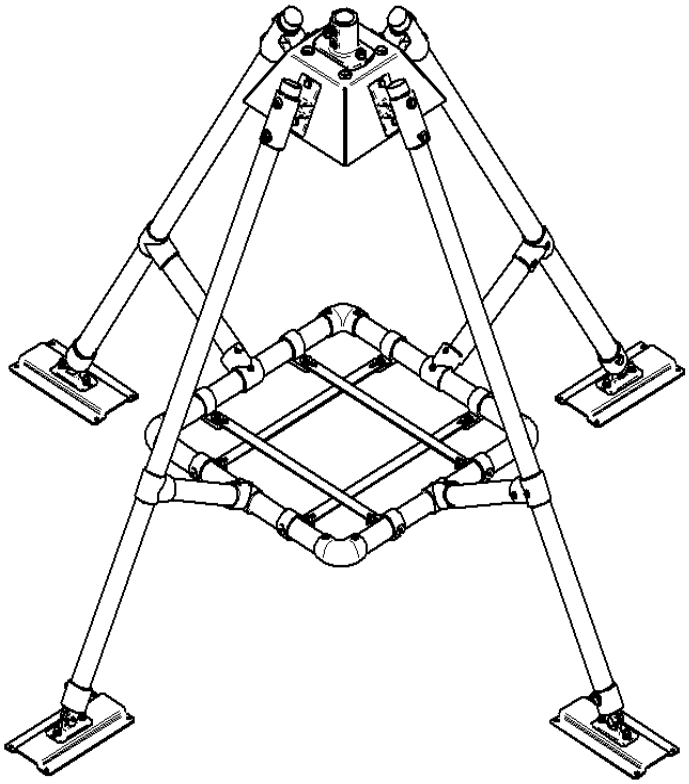

# 10



1x



1x 8ft Pole

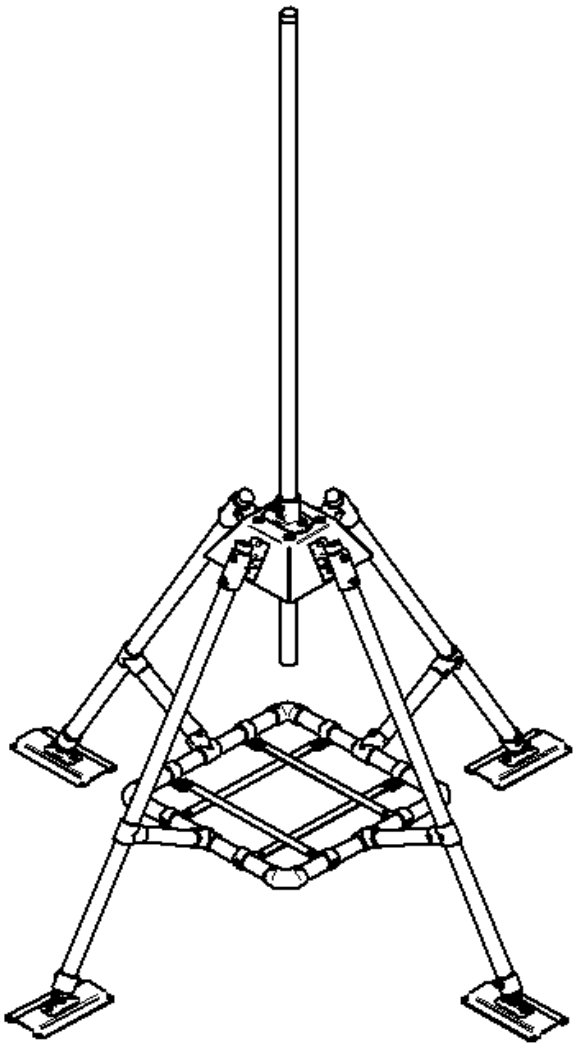

Issue 1. Original May 2017 RSP
Issue 2. TKP name change to TKI, Apr 2019. RSP
Issue 3. Part number issues revised. Sep 2020. RSP

© Turnkey Instruments Ltd. RSP